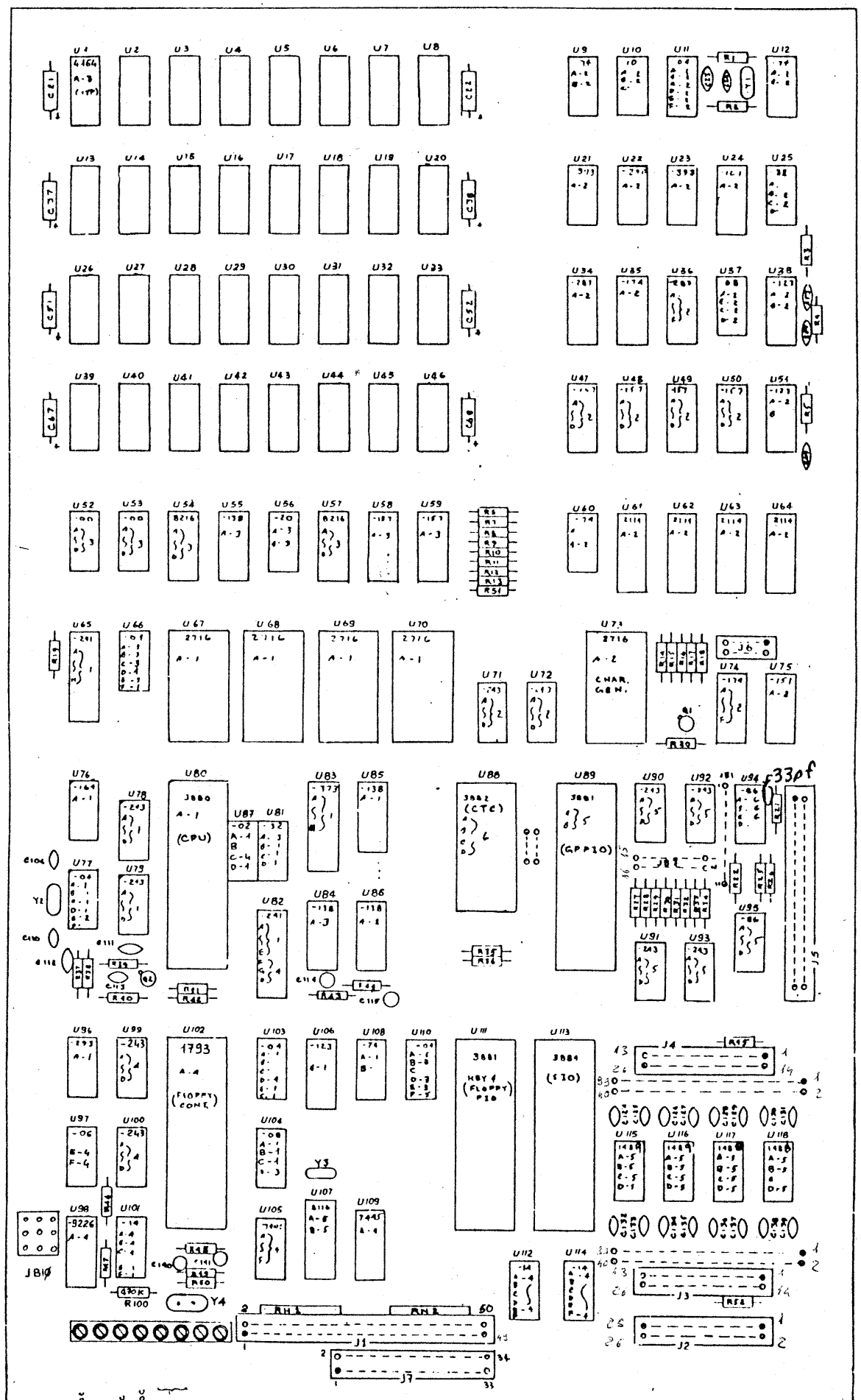

ADE elettronica

LAYOUT, CIRCUIT USAGE

MK 84

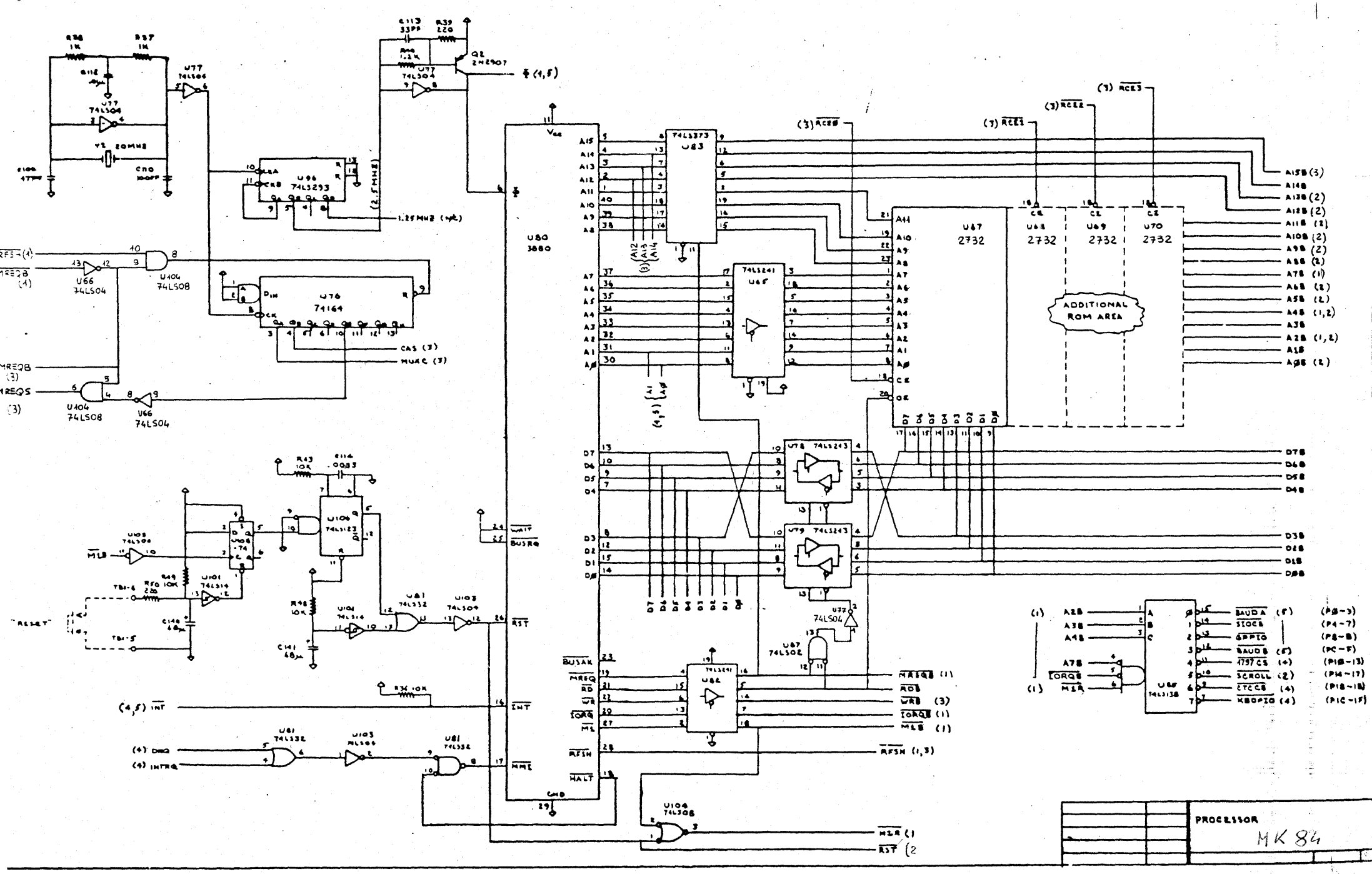
PROCESSOR
MK 84
U80
Z80
U67
2732
U68
2732
U69
2732
U70
2732
ADDITIONAL ROM AREA
U83
74LS373
U65
74LS241
U78
74LS243
U79
74LS243
U84
74LS241
U76
74164
U96
74LS293
U77
74LS04
U66
74LS04
U104
74LS08
U106
74LS123
U81
74LS32
U103
74LS04
U101
74LS14
U105
74LS04
U108
74LS138
U67
74LS02
U104
74LS08
Q2
2N2907
Y2
20MHZ
1.25MHZ
CAS (3)
MUXC (3)
BUSAK
MREQ
RD
WR
IORQ
M1
RFSH
HALT
WAIT
BUSRQ
RST
INT
NMI
M1R (1)
RST (2)
BAUDA (5)
SIOCS
GPPIO
BAUDB (5)
1797 CS (4)
SCROLL (2)
CTCCS (4)
KBDPIO (4)

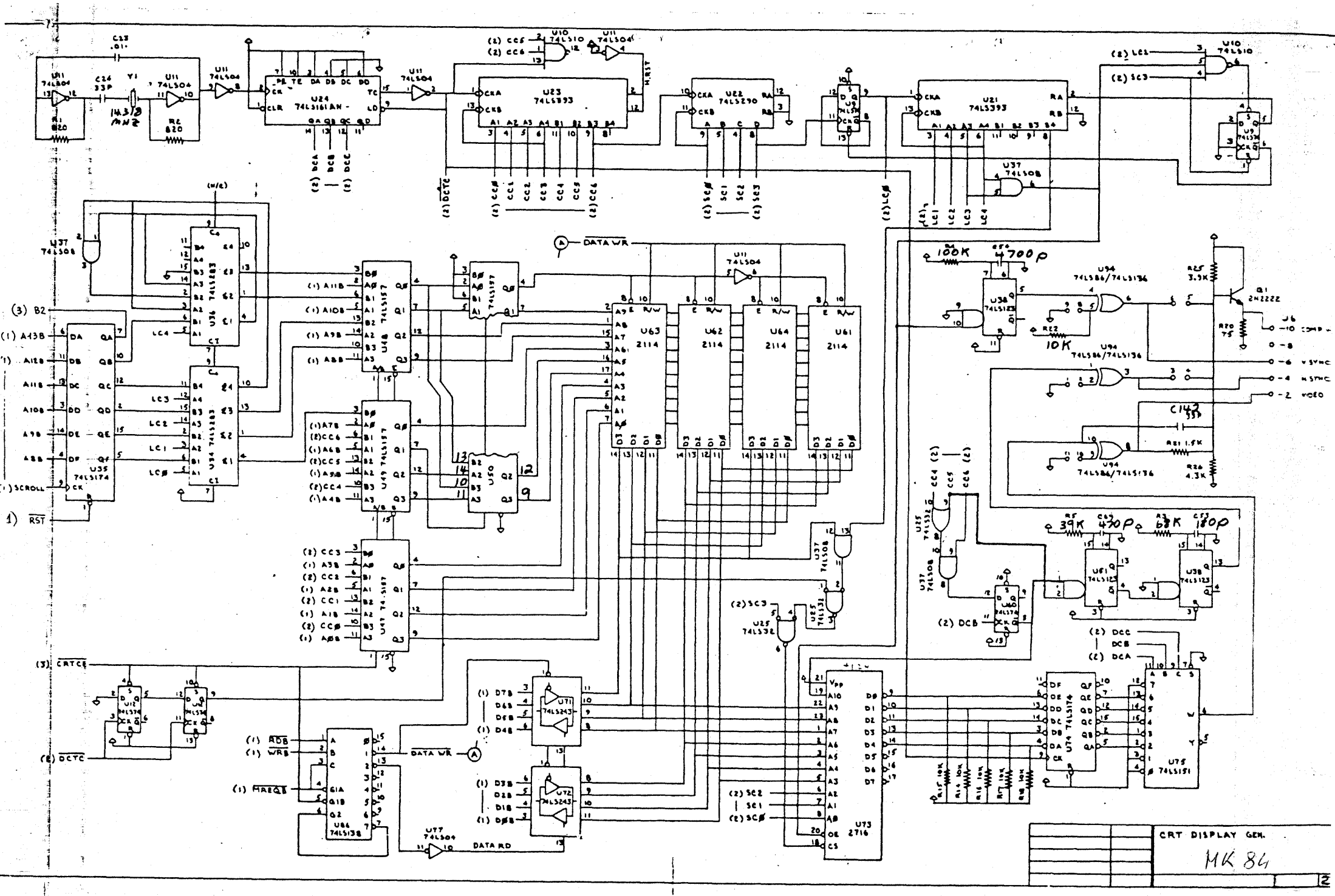
CRT DISPLAY GEN.
MK 84
U24 74LS161AN
U23 74LS393
U22 74LS290
U21 74LS393
U10 74LS10
U11 74LS04
U37 74LS08
U36 74LS283
U35 74LS174
U34 74LS283
U48 74LS157
U49 74LS157
U50
U63 2114
U62 2114
U64 2114
U61 2114
U38 74LS123
U61 74LS123
U94 74LS86/74LS136
U25 74LS32
U25 74LS31
U86 74LS138
U71 74LS243
U72 74LS243
U73 2716
U74 74LS174
U75 74LS151
DATA WR
DATA RD
14.318 MHZ
100K
4700p
10K
39K
470p
68K
180p
Q1 2N2222
R25 3.9K
R20 75
R26 4.3K
C142 33p
R21 1.5K
J6
COMP
VSYNC
HSYNC
VIDEO

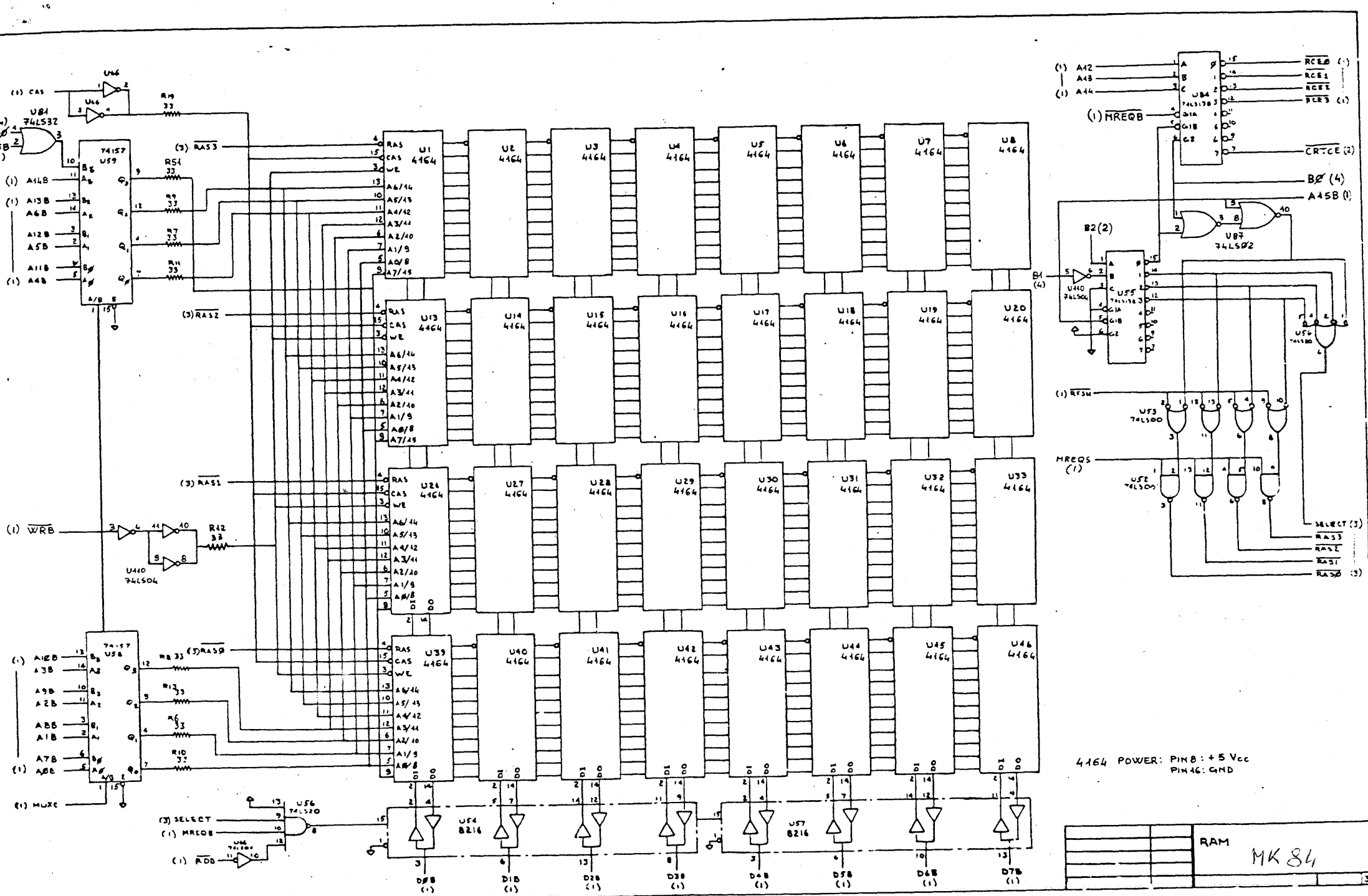
U46
U46
(1) CAS
U81
74LS32
R19
33
74157
U59
(3) RAS3
R51
33
(1) A14B
(1) A13B
A6B
R9
33
A12B
A5B
R7
33
A11B
(1) A4B
R11
33
(3) RAS2
(3) RAS1
(1) WRB
R42
33
U440
74LS04
74157
U58
(3) RAS0
A10B
A3B
R8 33
A9B
A2B
R13 33
A8B
A1B
R6 33
A7B
(1) A0B
R10 33
(1) MUXC
U56
74LS20
(3) SELECT
(1) MREQB
U46
74LS04
(1) RDB
U1 4164
U2 4164
U3 4164
U4 4164
U5 4164
U6 4164
U7 4164
U8 4164
U13 4164
U14 4164
U15 4164
U16 4164
U17 4164
U18 4164
U19 4164
U20 4164
U26 4164
U27 4164
U28 4164
U29 4164
U30 4164
U31 4164
U32 4164
U33 4164
U39 4164
U40 4164
U41 4164
U42 4164
U43 4164
U44 4164
U45 4164
U46 4164
RAS
CAS
WE
A6/14
A5/13
A4/12
A3/11
A2/10
A1/9
A0/8
A7/15
DI
DO
U54 8216
U57 8216
D0B (1)
D1B (1)
D2B (1)
D3B (1)
D4B (1)
D5B (1)
D6B (1)
D7B (1)
(1) A12
A13
(1) A14
U84
74LS138
(1) MREQB
RCE0 (1)
RCE1
RCE2
RCE3 (1)
CRTCE (2)
B0 (4)
A15B (1)
U87
74LS02
B2(2)
B1 (4)
U440
74LS04
U55
74LS138
U54
74LS00
(1) RFSH
U53
74LS00
MREQS (1)
U52
74LS00
SELECT (3)
RAS3
RAS2
RAS1
RAS0 (3)
4164 POWER: PIN 8 : +5 Vcc
PIN 16: GND
RAM
MK 84

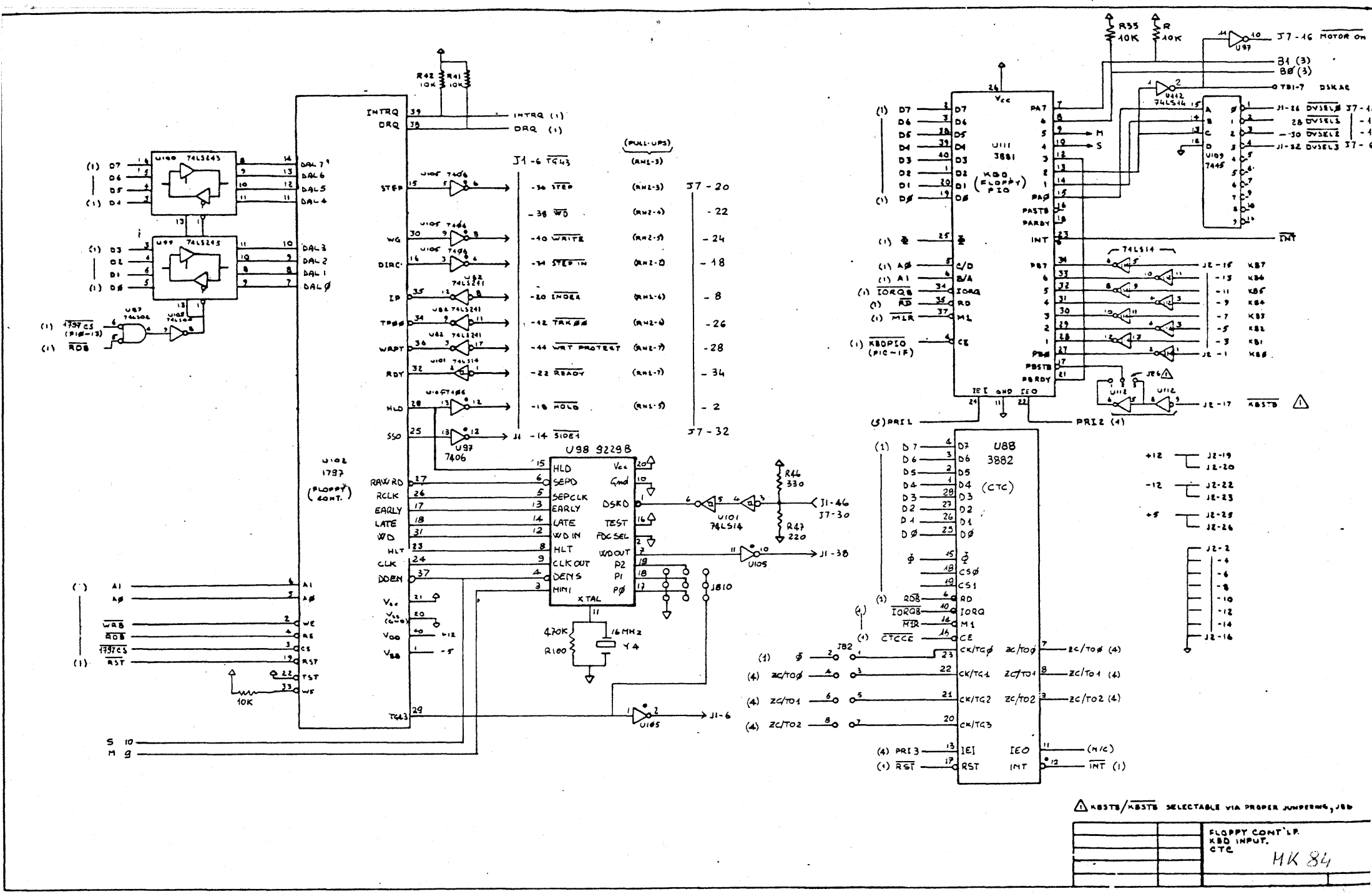
U100 74LS245
U99 74LS245
U102 1797 (FLOPPY CONT.)
U98 9229B
U111 3881 (KBD FLOPPY PIO)
U88 3882 (CTC)
U109 74LS45
U97 7406
U101 74LS14
U105
U112
R42 10K
R41 10K
R35 10K
R 10K
R44 330
R47 220
R100 470K
16MHz Y4
J810
J1-46 J7-30
J1-38
J1-6
J7-16 MOTOR ON
B1 (3)
B0 (3)
TB1-7 DSKAC
J1-26 DVSEL0
28 DVSEL1
30 DVSEL2
J1-32 DVSEL3
INTRQ (1)
DRQ (1)
J1-6 TG43
J1-14 SIDE1
J7-20
J7-22
J7-24
J7-18
J7-8
J7-26
J7-28
J7-34
J7-2
J7-32
(PULL-UPS)
J2-15 KB7
J2-13 KB6
J2-11 KB5
J2-9 KB4
J2-7 KB3
J2-5 KB2
J2-3 KB1
J2-1 KB0
J2-17 KBSTB
PRI2 (4)
PRI1 (5)
+12 J2-19 J2-20
-12 J2-22 J2-23
+5 J2-25 J2-26
J2-2 -4 -6 -8 -10 -12 -14 J2-16
ZC/TO0 (4)
ZC/TO1 (4)
ZC/TO2 (4)
PRI3 (4)
RST (1)
INT (1)
(N/C)
KBSTB/KBSTB SELECTABLE VIA PROPER JUMPERING, J6B
FLOPPY CONT'LR.
KBD INPUT.
CTC
MK 84

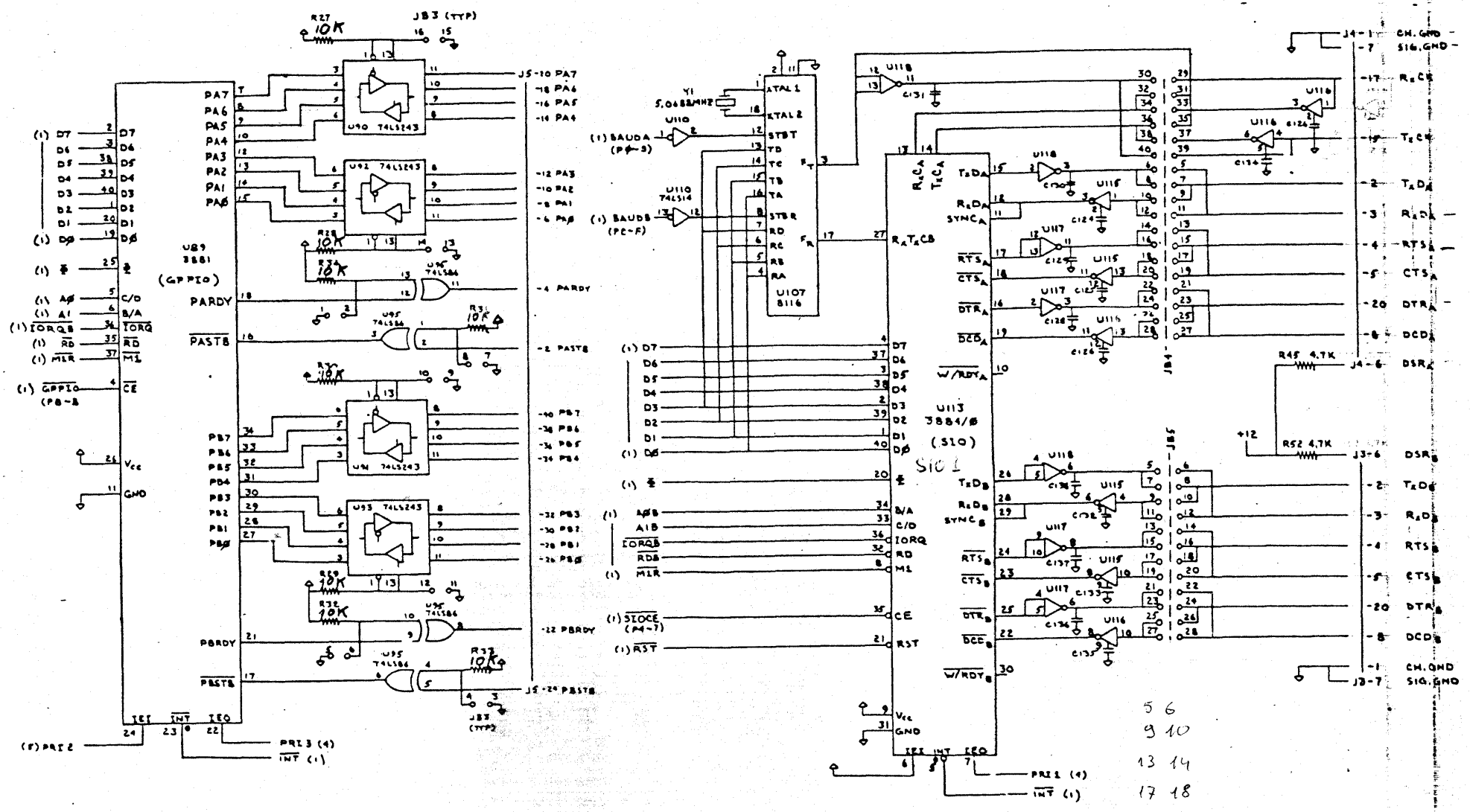

NOTE(S)
1. CAPS ON SIO IN/OUT DRIVERS: 390PF

GP PIO/SIO

MK84